UTET

LOTUS

Marvellous Innovation

Electrische Kombikessel

E300 3-6KW COMBI BOILERUSER MANUEL

CE

Handbuch für

Installation, Verwendung und Wartung

INDEX

GENERAL FEATURES....1
1.General Information....3
1.1.Important Instructions and Recommendations....3
1.2.Safety....3
1.3.Main Parts....4
1.4.Installation....4
1.5.Mechanical Installation....5
1.6. Hydraulic Installation....6
1.7.Electrical Installation....7
1.7.1.Connecting the boiler to the electricity grid....7
1.7.2.Installation of Room Thermostat....8
2.Use....9
2.1.Start Up....9
2.2.Usage of Combi....10
2.2.1.Display and Buttons....10
2.2.2.Pictograms....11
2.2.3.Menus....11
2.2.4.Functions....13
2.2.5.Protection Functions....15
3.Maintanance....15
3.1.Maintenance and Repair Conditions....15
3.2.Annual Maintenance Procedures....16
4.Warranty....16
4.1.Warranty conditions....16
4.2.Warranty Overrides....17-18
5.0 Installation confirmation and guarantee certificate....19

GENERAL FEATURES

UTET LOTUS E Series electric combi boilers are available in 3 different wall type models.

It works with single phase household electricity (single phase, 220 V AC or triphase 400 VAC) related to producing.

- **Advantages;**

1.1.I. **Low Operating Cost**

It has very low energy consumption comparing with conventional electrical combi boilers.

It requires no additional adjustment once it is properly installed.

It adapts well with currently installed radiating system.

1.1.II. **Integrated Solution**

It meets your heating and hot water needs. Room temperature sensor is provided free of charge.

- **FULL DELIVERY**

The electric boiler is delivered ready for installation along with the following:

- Ready-to-install electric boiler
- User manual
- Warranty card (Back page of this manual)
- Power supply cable (1 x 230 V) or (3PNE 400 VAC)for electrical control panel

The accessories that are not included in deliver are as following:

- External fuse, leakage relay and associated cables and assambly parts

- **Shipping & Storage**

- Any shocks should be eliminated and the boiler should not be slipped in the package.
- Installing and operating the boiler according to the instructions in the package.
- Meeting standart storage conditions during storage (dust free

  environment, temperature of 5 ° C to 50 ° C, humidity up to 75%, biological effects, should not be exposed to blows and vibration).

❖ **Requests**

- Follow the rules listed in the warranty list. Unless the warranty card is filled your request is invalid.
- Do not repair your boiler if it has any damages on its function or surface.
- In the case of above, contact to your installer or one of the maintenance company on the warranty list.

❖ **Disposal Method**

Solid waste recycling;

- Carton Box, Inner Foams, PE Bags, Polystyrene, Scotch Tape
- Recycling after the end of the boiler's life as required by national normative waste recycling

1. General Information

UTET Lotus E Series Wall-Type Boiler is designed for creating heat and hot water in domiciles.

Heating is provided with a maximum of 6 KW. This heating device provides high efficiency operation and save energy consumption.

The boiler can work with room thermostat. The domestic water is also heated by three-way valve connection.

1.1. Important Instructions and Recommendations

- It is important that the manufacturer's regulations and instructions are followed during installation, commissioning and maintenance of the boiler. It is also important that you read the user manual and the warranty conditions.
- Check that the boiler in the box is complete with the supplied accessories.
- Check that the boiler type is suitable for your intended use.
- Check that the data indicated on the nameplate correspond to the boiler connection and installation conditions
- Request an appointment from the authorized services for installation and first use.
- The boiler is designed for home use. It should not be used for industrial or commercial use where continuous hot where water is required.
- Safe and economical operation of the boiler requires a dealers to create a project fort he entire heating system.

1.2. Safety

Fire Instructions

- Switch off the power supply to the boiler and stop it.
- Extinguish fire on flammable and explosive materials by spraying or lubricating.
- Do not store flammable or explosive materials near the boiler (eg paper, paint, chemicals, etc.).

1.3. Main Parts

- Case
- Front cover
- Reactor Group (Boiler body, sensors, safety valve)
- Hydraulic Group
- Control card, Display and Key Group
- Relay, Contactor, Terminal group
- Imbusat tank and Safety valve
- Expansion tank
- Sensors and Safety Thermostat
- Control panel holder
- Safety valve
- Circulation pump

1.4. Installation

- The installation and assembly of the boiler is only carried out by UTET LOTUS authorized service personnel.
- For a safe and economical operation of the boiler an authorized UTET LOTUS dealer establishes the project for the entire heating system.
- Flammable materials shall not be placed near the boiler.
- In case of any operation related to the boiler, the main supply power must be cut off.
- Never operate the appliance without good grounding. (Ground resistance should be measured and if it is above 0 Ohms, no installation should be done!)

Fuse and leakage relay must be installed. The wall-type boiler cannot be moved or moved.

The filter and shut-off valve must be provided at the heating water inlet and on the return line of the heating circuit.

For easier after-sales service, the distance between wall and boiler should be min.100 mm and at least 400 mm with ceiling. If you avoid the space requirement, you will have to pay a service charge for removing and reinstalling the boiler from the wall and heating system that excluded from the warranty repairments.

For the safe operation, design, installation and service of the boiler, the following norms and rules apply:

- Heating system design and installation in buildings
- Heating system safety and protection equipment in buildings
- Fire safety in heating devices
- Basic rules of water and low steam boilers
- Electrotechnical rules. Safety rules for electrical appliances used by persons who do not have an electrical certificate
- Electrotechnical rules. Inside the electricity distribution system.
- Electrotechnical rules, connection of electrical equipment
- EN 50110-1: 2005 Service and operation of electrical equipment
- EN 55014: 2001 Electromagnetic compatibility requirements for household appliances, electrical appliances and similar appliances
- EN 60355-1 + A55: 1997 For safety of household electrical appliances and similar purposes
- EN 61000 Electromagnetic compatibility (EMC)

1.5. Mechanical Installation

Room where the boiler will be placed and mounted on the Wall should be under normal environmental conditions.

The boiler should not be installed in bathrooms, washrooms, shower rooms, wet floors, or places where there is a possibility of excessive heat or freezing.

Regarding protection and safety; it is referred to minimum distances from flammable objects. Observe these distances during installation.

We recommend keeping these distances wider for ease of service and replacement:

- 500 mm from the front

- 600 mm from above

- 200 mm from the sides

Wall mounting of the boiler

Installation is carried out with 2 screws or hooks to hang the boiler with 2 inlets and the distance between the holes in the body of the boiler is 282 mm.

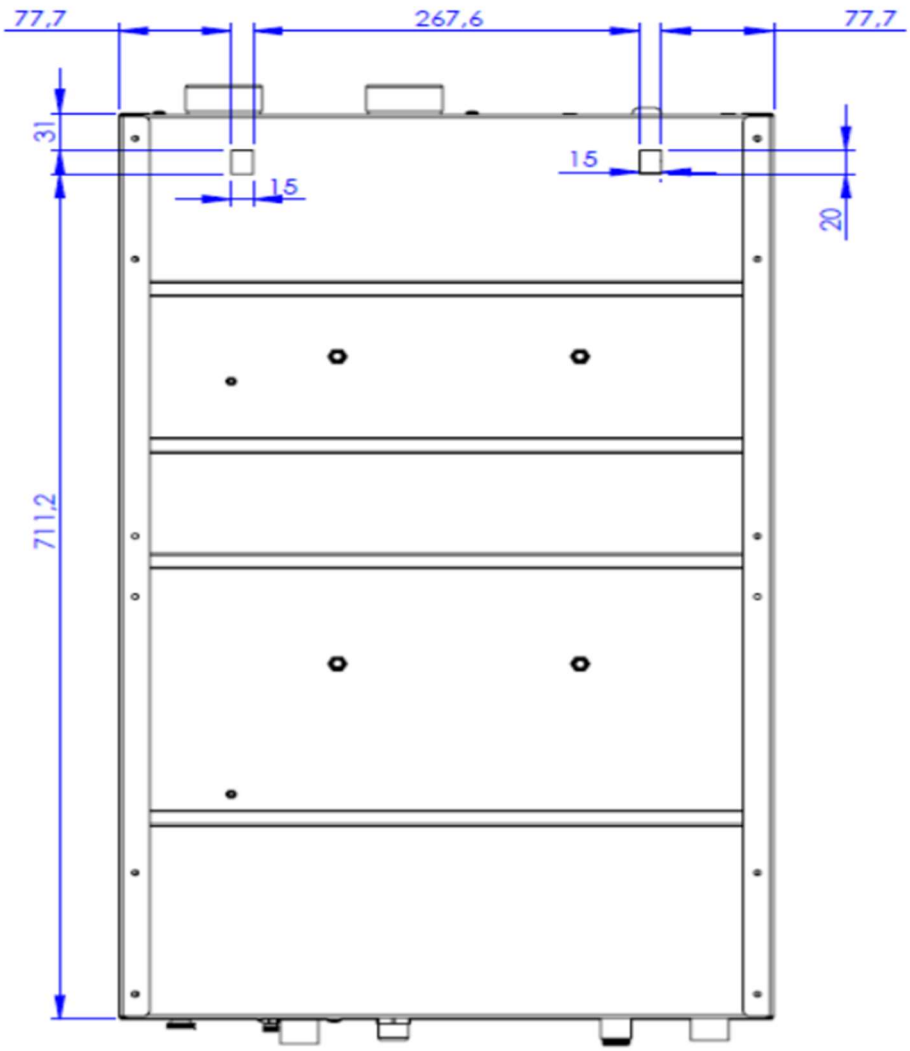

1.6. Hydraulic Installation

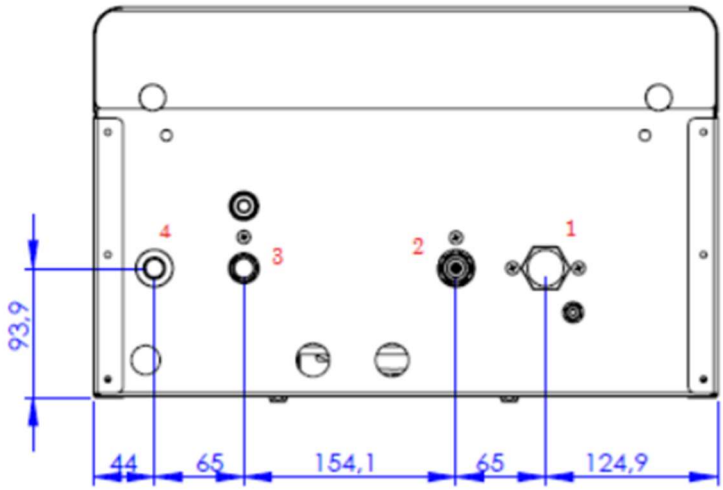

Sub Connection Outputs:

1. Heating Return (Pipe Diameter ¾ ”)

2. Cold Water Inlet (Pipe Diameter ½ ”)

3. Cold Water Outlet (Pipe Diameter ½ ”)

4. Heating Outlet (Pipe Diameter ¾ ”)

Thoroughly cleanse the heating system before connecting the appliance!

Connect the drain and hose from the pressure relief valves into the top of a tundish and use a 1$^{1/4}$” (one anda quarter inch) PVC pipe to connect to the premises drains

Pipe Connections

	Connection	Pipe Diameter
1	Heating Return CH	%” (Three Quarter Inch)
2	Cold Water Inlet	'h” (Half Inch)
3	Hot Water Outlet (DHW)	'h” (Half Inch)
4	Heating Flow CH	%” (Three Quarter Inch)

Fig 2. Pipe connections

Below Fig 3. is a simple flow diagram of the heating and hot water system identifying key areas of theLotus 20kWboiler unit.

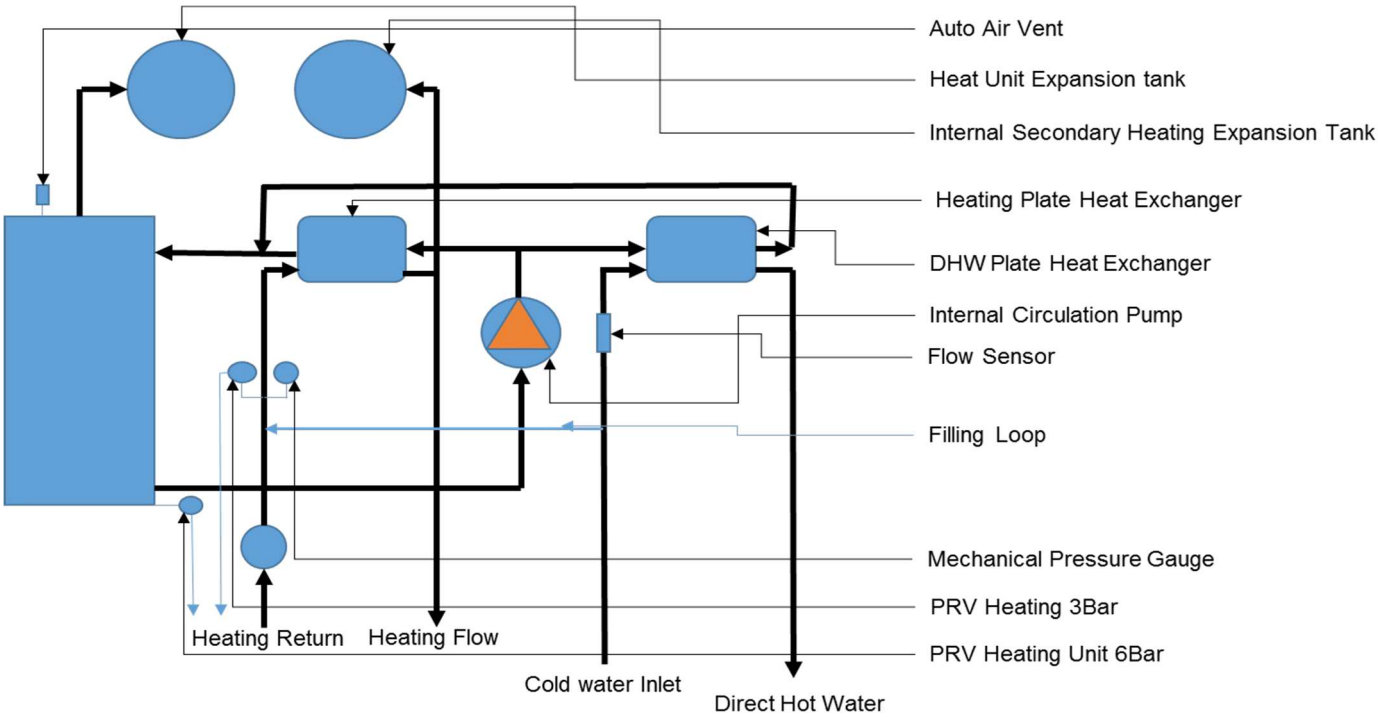

1.7. Electrical Installation

1.7.1. Connecting the boiler to the electricity grid

The following applications are mandatory;

Before assembling the boiler; The appropriate fuse, residual current protection relay and the cable (at the values specified in the technical table below) must be installed inside / outside the installation.

It is mandatory to connect the boiler to the individual grounding line.

If this is not done, the device will not be commissioned by UTET LOTUS authorized service, the device will be out of warranty and UTET LOTUS shall not be liable for any possible damages / problems.

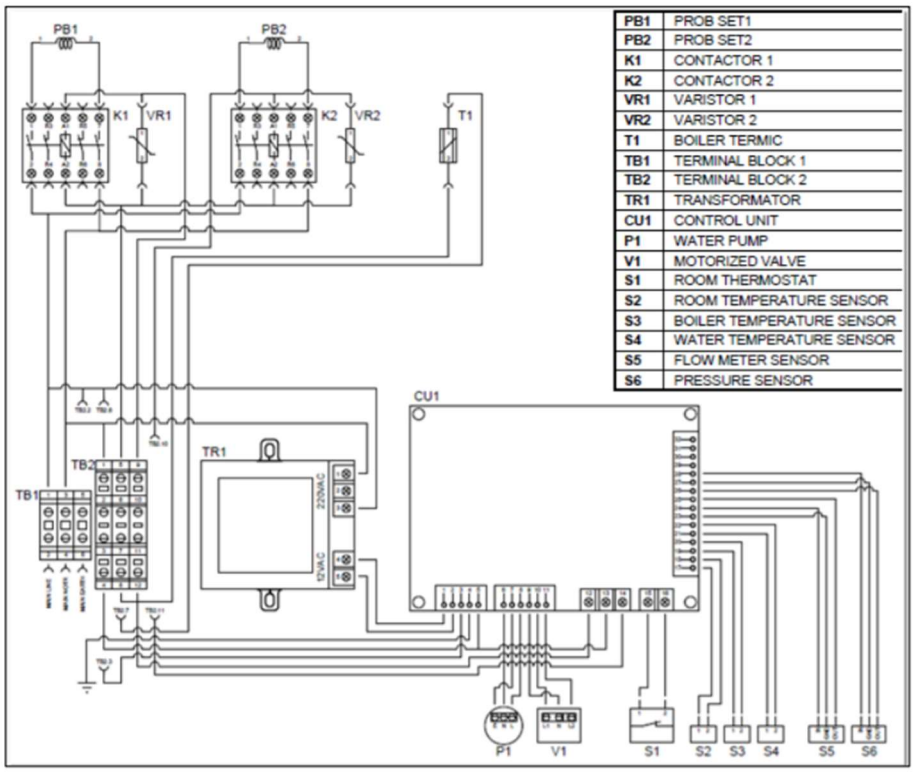

PB1	PROB SET1
PB2	PROB SET2
K1	CONTACTOR 1
K2	CONTACTOR 2
VR1	VARISTOR 1
VR2	VARISTOR 2
T1	BOILER TERMIC
TB1	TERMINAL BLOCK 1
TB2	TERMINAL BLOCK 2
TR1	TRANSFORMATOR
CU1	CONTROL UNIT
P1	WATER PUMP
V1	MOTORIZED VALVE
S1	ROOM THERMOSTAT
S2	ROOM TEMPERATURE SENSOR
S3	BOILER TEMPERATURE SENSOR
S4	WATER TEMPERATURE SENSOR
S5	FLOW METER SENSOR
S6	PRESSURE SENSOR

Recommended fuse size and cable diameters

- 1x230V + N + PE 3x2,5 mm² (min.)
- Household Auto Fuse, 25 A
- 3PNE 400 VAC
- 5X2,5 mm² (min.)
- Household Auto Fuse, 16 A
-

1.7.2. Installation of Room Thermostat

- Connect the room thermostat with a twin core cable of minimum Cu 0.5 mm2 of recommended diameter and 25 m length.
- It is not permitted to install the room thermostat cable in the same way as the supply cable or other electrical or industrial installation. The minimum separation is 10 mm.
- The room thermostat must be located away from the sun, electrical devices and heat generators

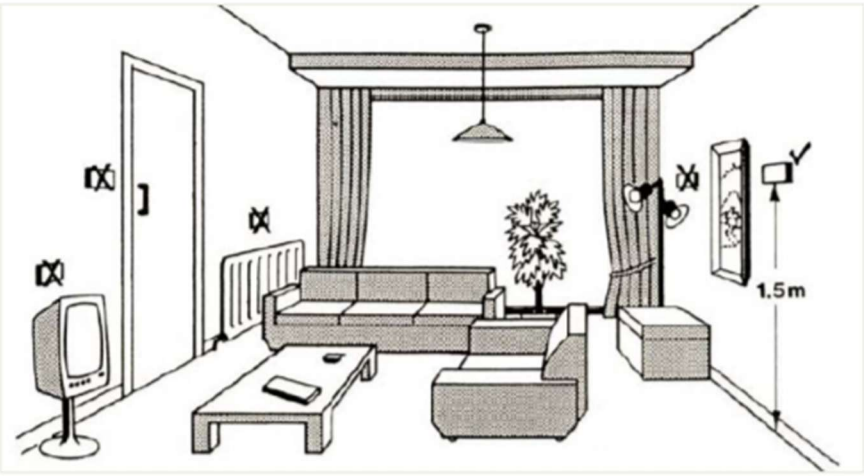

2. Use

2.1. Start Up

Starting up of the boiler is only carried out by UTET LOTUS authorized service personnel.

Starting up of the boiler should only be carried out by authorized professional companies or service personnel who have a valid agreement with the manufacturer. The Authorized Service List is as attached.

The company or the person starting up the boiler has an obligation to repair any defects or defects during the warranty period. If this company no longer operates, the warranty repair will be performed by your nearest authorized service agent listed on the list.

The commissioner has taken over the following obligations:

- check the connection of the boiler to the electricity grid and the heating system
- check the sealing of the boiler
- control all functions of the boiler
- informing the user of the operation, control and maintenance of the boiler

- informing the user of the distance of the boiler to flammable materials, fire protection and safety gaps to be left from the walls

To meet the requirements for safe and economic operation of the boiler, the following conditions must be met:

- User for installation and installation of the boiler; the electrical network must be suitable for installation.
- when assembling the boiler, you must have a technical project for the connection of the heating system and the electric boiler
- User for installation and installation of the boiler; the electrical network must be suitable for installation.
- when assembling the boiler, you must have a technical project for the connection of the heating system and the electric boiler
- the boiler must only be installed in a suitable environment for the intended use and Project
- Modification, operation, use, control and maintenance of the boiler is prohibited unless it complies with the rules and directives of this manual.

Removing of safety devices or components in the boiler is particularly prohibited!

2.2. Usage of Combi

2.2.1. Display and Buttons

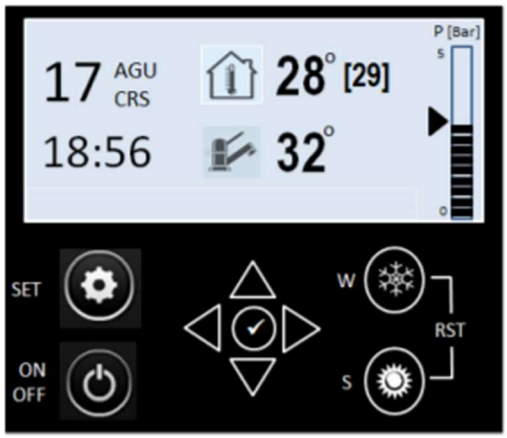

When ON / OFF button is pressed [ON]:

- The LED of the corresponding button lights up.
- All functions and buttons are available.

Press the ON / OFF button again [OFF]:

- The LED of the corresponding button goes out.
- All functions and buttons are disabled, except for protection functions 1 and 2.

When SET button is pressed:

- The display shows only the heating temperature value. (Room thermostat icon, if available)
- Heating temperature adjustment is done with upper-lower buttons.
- Pressing the SET button once returns to the main screen.

- Activate the last setting if the "Maintain my last settings" option in the Settings menu is active. Initial start set value is 22 C.

When WINTER MODE button is pressed

- The LED of the corresponding button lights up.
- Refer to Part 3. Normal Function
- If the conditions do not match, send the Warning and / or Error code to the screen.

When the SUMMER MODE button is pressed

- The LED of the corresponding button lights up.
- Refer to Part 3. Normal Function
- If the conditions do not match, send the Warning and / or Error code to the screen.

If one of the WINTER and SUMMER MODE buttons is pressed, the other button is deactivated.

If WINTER and SUMMER MODE buttons are pressed together for 1 sec.;

- The led of both buttons flash 3 times.
- Reset The processor is reset.
- Both buttons (mode) are deactivated.

If the WINTER and SUMMER MODE buttons are pressed together for 1 s while the child lock is activated, only the lock is released and the pictogram goes away.

Pressing the ENTER button (navigation center) switches to the MENU screen. Pressing it again will bring up the main display screen.

Switch to Delay Mode after 30 seconds of inactivity.

Delay Mode 10 min. active, then dimming until any key is pressed.

2.2.2. Pictograms

1. Boiler active (heating icon)

2. Pump active (pump icon)

3. Auto Schedule active (clock icon)

4. Room Thermostat active (thermometer icon)

5. Key Lock active (Key icon)

6. WiFi active (WiFi icon)

7. Service requirement (wrench icon)

8. Has error code

9. Turbo active (+ on top right of heating icon)

2.2.3. Menus

When the ENTER button (Navigation / Center)is pressed, the MENU screen is displayed. Pressing it again or after 30 seconds of inactivity displays the main display screen. Switching between menus are done with the navigation keys. The preferences are shown in contrasts.

Auto Program Tab

Main Menu	Oper. Inf.	Auto Prog.	Fault Det.	Settings
Boiler Status (ON / OFF) Pump Status (ON / OFF) Automatic Prog. Status (ON / OFF) Room Thermostat (ON / OFF) WiFi Status (ON / OFF) Child Lock (ON / OFF) Turbo (ON / OFF)				

❖ Main (Home) Menu Tab

- Boiler Status (ON / OFF)
- Pump Status (ON / OFF)
- Automatic Prog. Status (ON / OFF)
- Room Thermostat (ON / OFF)
- WiFi Status (ON / OFF)
- Child Lock (ON / OFF)
- Turbo (ON / OFF) (When Turbo mode is active, the pump starts working with the boiler. If it is not active, the pump will not turn on until the boiler temperature reaches a certain value)

❖ Operational Information Tab

- Boiler temperature [C]
- Heating temperature [C]
- Water temperature [C]

- Total Working Time [hour]
- Total Boiler Operation Time [hour]
- Last Maintenance Date
- Future Maintenance Date (when maintenance is requiired “Service requirement (wrench) icon” appears)

Auto Program Tab

Main Menu	Oper. Inf.	Auto Prog.	Fault Det.	Settings

Time Zone	Mon	Tue	Wed	Thu	Fri	Sat	Sun
00-06							
06-09							
09-18							
18-21							
21-24							

❖ Settings Tab

- Three levels of adjustment can be made. Customer, Service and Manufacturing. Service and Manufacturing Adjustment Menus will need “Access Code.
- Customer Setup Menu
  - Keep recent settings. [Y / N]
  - Clock Setting
  - Language Selection [EN / EN]
  - Temperature Display [C / F]
  - Restore Factory Settings. [Y / N]
- Service Setting Menu
  - Room thermostat adjustment [Y / N]
  - Enter the service date and the next service date.
  - Recording and deleting error codes

2.2.4. Functions

Short self-test is performed at the moment of initial power-up. At the time of the first power-up, everything is closed, except “Protection function 1 and 2”

❖ WINTER MODE:

Operate the reactor if the conditions are appropriate (see Operation lower and upper threshold table).

- The reactor temperature (regardless of the setpoint) is kept constant in the 80-90 range. (This value can be changed in the Factory Setting menu.)
- The circulation pump runs until you reach the setpoint (see page 3 for the setting).
- The setpoint is referenced to the NTC / room thermostat.
- When the setpoint is reached, the circulation pump waits (Hysteresis + 2 C).
- "If the water flow switch is" 1 , the water path is switched to the water heating position by motorized valve 8.
- When the setpoint is reached, the motorized valve 8 is set to the heating position (Hysteresis + 2 C).
- If the conditions do not match, send the Warning and / or Error code to the screen.

❖ SUMMER MODE:

- Operate the reactor if the conditions are appropriate (see Operation lower and upper threshold table).
- The reactor temperature (regardless of the setpoint) is kept constant in the range 80-90. (This value can be changed in the Factory Setting menu.)
- The motorized valve is permanently placed in the water heating position.
- If the conditions do not match, send the Warning and / or Error code to the screen.

	Type	**Distance**	**Bottom Working Limits**	**Top Working Limits**	**Unit**
Water Flow Switch (10)	shifter		0	1	
Central Heating Temperature Sensor (11)	NTC-100	0-10K		60	C
Boiler temperature sensor (13)	NTC-100	0-10K		90	C
Water Temperature Sensor (17)	NTC-100	0-10K		60	C
Central Heating Pressure Sensor (24)			1	2,5	B
Central Heating / Room Temperature Sensor (27)	NTC-100	0-10K		60	C
Boiler Temperature Limit Thermostat				105	
Feeding Voltage			180	230	V
Boiler Pressure Valve_Mechanical				3	B
Heater Pressure Valve_Mechanical				7	B

2.2.5. Protection Functions

- Protection Function 1: Freeze protection of the boiler

This function protects the boiler against frost. The device must be energized for this feature to be active. If the DHW temperature (NTC 17) drops below 5 ° C, the circulation pump and the boiler run for 5 minutes.

- Protection Function 2: Switching on the heating system protection

If the circulation pump does not run for more than 24 hours, the protection will trip and prevent the pump or valve from being pinched. This function extends the life of the pump in STAND-BY mode by preventing the pump from jamming. The pump runs once a day for 10 seconds.

- Protection Function 3: Protection against overheating

The boiler has an overheating safety thermostat set to 105 ° C. In case of overheating of the boiler, the boiler electricity is switched off independently of the control unit. This fault is shown in the display as critical fault No.x. This fault may only be repaired by authorized service personnel.

- Protection Function 4: Protection against low water pressure

The boiler should be ON.

When the mains water is cut off, a Check Valve is placed at the boiler cold water inlet to prevent discharge in the boiler or installation. When the pressure is low, an error messge as “Low pressure in the heating system ” is displayed.

- Protection Function 5: Combination protection against high and low voltage in the mains

The controller is equipped with a function that deactivates the boiler if the voltage is less than 150 V or higher than 250 V. When the voltage is in the 150-250 V range, the boiler returns to normal operation.

- Protection Function 6: Combination protection against high and low voltage in the mains

The controller is equipped with a function that deactivates the boiler if the voltage is less than 150 V or higher than 250 V. When the voltage is in the 150-250 V range, the boiler returns to normal operation.

3. Maintanance

The boiler faults can only be repaired by UTET LOTUS authorized service personnel.

3.1. Maintenance and Repair Conditions

Possible defects can be eliminated by regular maintenance. We recommend that you have full maintenance once a year before operating the heating system. Removing the front cover is not allowed. The user can wipe the surface of the door with detergent and check the operating modes, or fill the heating system with water if the pressure gauge is low. All safety and operating checks are also carried out by heating and correct operation of the heating elements.

Operating times and maintenance dates are recorded in the microprocessor. When maintenance is due, the user is warned via the main display. During regular inspection and maintenance, the service person tightens all electrical connections, checks the tightness of all connections and checks the quality of the water in the heating system, cleans the water filter, the pump, checks the operating regulator cards, including the 3-way valve and the start function of the boiler.

3.2. Annual Maintenance Procedures

- Environmental control
- Visual control (Wear, tarnishing, burning…)
- Checking the pressure of the expansion vessel, filling if necessary
- Mechanical (filter, pump, leakage etc.) control
- Electrical (Performance) control
- Catalytic reinforcement if measurement of inter-electrode (water) resistance is required
- Interior cleaning
- Reading error codes, correcting the error (recording the error, sending it to the center if necessary)
- Software update if necessary (Card replacement is done in servicen and not software download.)

4. Warranty

4.1. Warranty conditions

This warranty is valid for 2 years from the date of commissioning. (There may be a maximum of 30 days between delivery date and commissioning date.) For this warranty to be valid, the first operation and interim periodical maintenance must be performed by authorized services. The warranty documents of the devices shall not be covered by the warranty unless they have been completed and approved by the Authorized Service Center.

The entire product, including all parts, is covered by the warranty during the warranty period. The maximum repair period is 20 (twenty) business days from the date of notification of the failure.

Existing legal regulations and rules must be followed exactly when selecting the installation location. The manufacturer cannot be held responsible for any negative conditions arising from non-compliance.

4.2. Warranty Overrides

1. Violation of the Installation and Useage Rules

2. Initial start-ups and interventions by persons other than UTET / Lotus authorized service

3. Incorrect installation, incorrect connection to mains

4. Damage caused by mounting the device in damp (bath, shower, wc ..) or in areas that may be affected by rain water

5. Installation of non-original parts not approved by the manufacturer

6. Damage caused by excessive heat and freezing in the environment of the device

7. Damages arising from storage in inappropriate environments

8. Damages caused by the use of excessive lime water in the hot water circuit (ideal water hardness should be 15-20 French hardness.)

9. Damage caused by improper installation and maintenance

10.Uses other than the intended use of the device

11. Devices which are kept in unfavorable conditions for a long time for exhibition purposes

12. Lack of documents issued by the authorized service after the first start and which should be available to the user

13. Devices with changed serial number or damaged

UTET LOTUS ®

Plasma - Kombikessel

Garantie Zertifikat / Guarantee Certificat

Produkt	: UTET Lotus Kombikessel
Model	:
Produkt Code	:
Montage Datum	:

Fach-Händler (Name, Anschrift, Stempel, Unterschrift)	Montage Ort (Name, Anschrift, Stempel, Unterschrift):
Datum:	Datum:

Dieses Produkt wird von UTET für 2 (zwei) Jahre garantiert, vorausgesetzt, Installation, Verwendung und Wartung werden gemäß den Informationen im Benutzerhandbuch durchgeführt.

Contact Adres GEC ELEKTROTECHNIK, office@elektro-gec.at
Darnautgasse 8, 1120 Wien

Contact Telefoon : +43 699 184 155 03